Overlapping Multidomain Chebyshev Method

Peter Daněček
Géza Seriani

Overview

- OMDC method
- Free Surface Boundaries
- Time schemes
- Accuracy Analysis
- Conclusion

Numerical method (1)

Overlapping Multidomain Chebyshev Method

N = 6

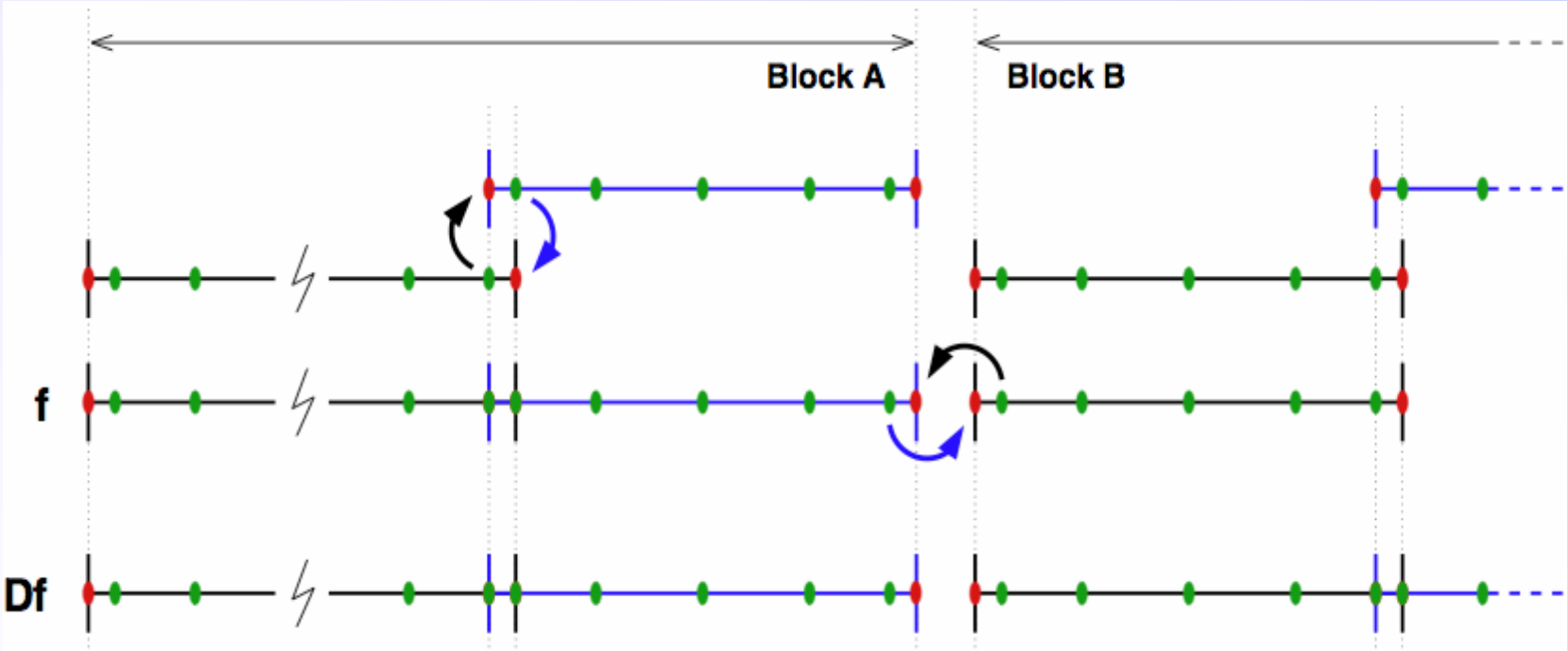

Numerical approximation

Example: Chebyshev, N=6

$$\sum_{k=0}^{N} c_k(t) w(\mathbf{x})$$

$$\sum_{k=0}^{N} \hat{u}_k(t) g_k(\mathbf{x})$$

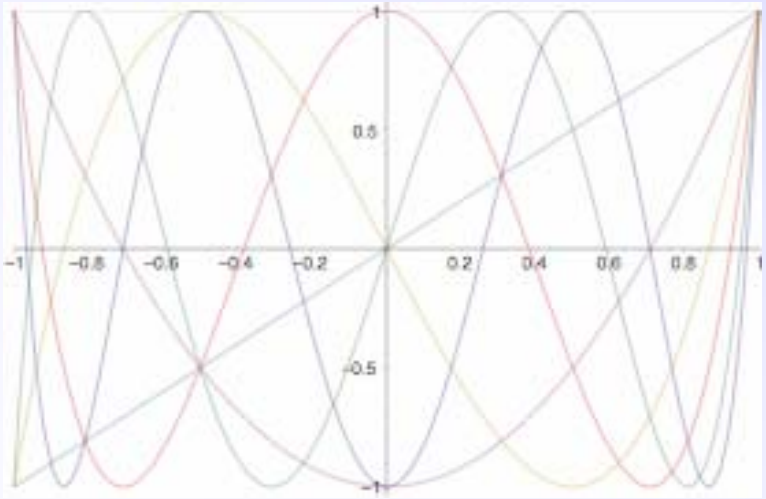

Chebyshev polynomials
(up to order N=6)

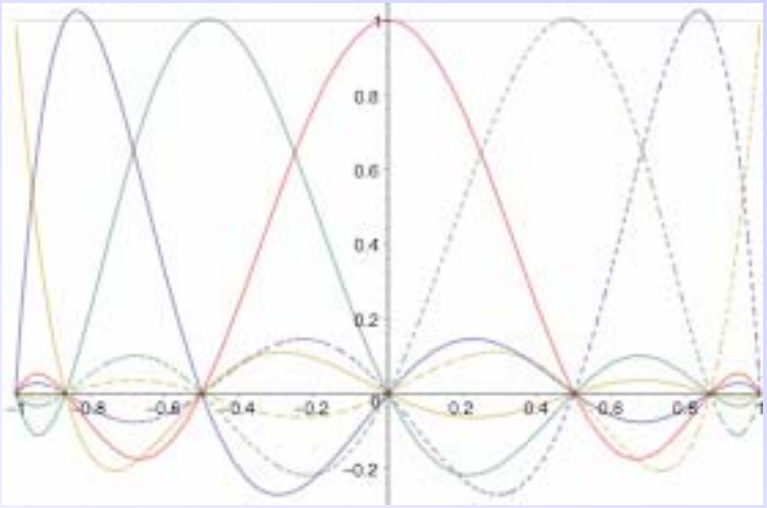

Corresponding cardinal functions

Numerical method (2)

OMDC

N = 6

$$
\begin{pmatrix}
D_{11} & D_{12} & D_{13} & D_{14} & D_{15} & D_{16} & D_{17} & & \ddot{\smile} & & 0 \\
D_{21} & D_{22} & D_{23} & D_{24} & D_{25} & D_{26} & D_{27} & & & & \\
D_{31} & D_{32} & D_{33} & D_{34} & D_{35} & D_{36} & D_{37} & & & & \\
\bullet & \bullet & \bullet & \bullet & \bullet & \bullet & \bullet & & \text{☠} & & \bullet \\
D_{51} & D_{52} & D_{53} & D_{54} & D_{55} & D_{56} & D_{57} & & & & \\
D_{61} & D_{62} & D_{63} & D_{64} & D_{65} & D_{66} & D_{67} & & & & \\
 & & & & & D_{21} & D_{22} & D_{23} & D_{24} & D_{25} & D_{26} & D_{27} \\
 & & & & & D_{31} & D_{32} & D_{33} & D_{34} & D_{35} & D_{36} & D_{37} \\
\bullet & & & \text{☠} & & D_{41} & D_{42} & D_{43} & D_{44} & D_{45} & D_{46} & D_{47} \\
 & & & & & D_{51} & D_{52} & D_{53} & D_{54} & D_{55} & D_{56} & D_{57} \\
 & & & & & D_{61} & D_{62} & D_{63} & D_{64} & D_{65} & D_{66} & D_{67} \\
0 & & & \ddot{\smile} & & D_{71} & D_{72} & D_{73} & D_{74} & D_{75} & D_{76} & D_{77}
\end{pmatrix}
$$

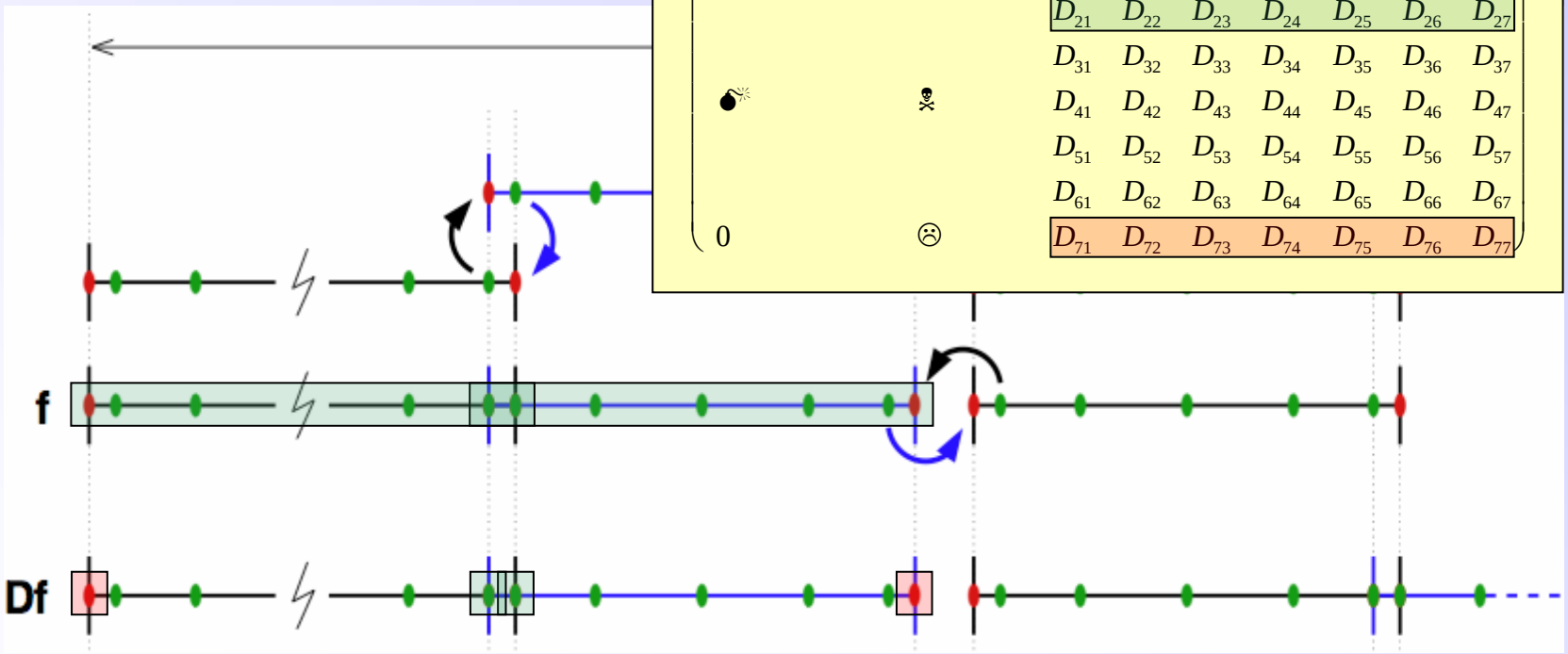

Design goals

- Simulation of 3-D large scale models
- Algorithm with good scalability for parallel computation
- Structured method with implicit topology
- Strong formulation
- Spherical geometry for continental & global scale

➢ **<u>Why?</u>**

- Earth models on larger scales are smooth
- grid generation and explicit topology are avoided
- save computational resources for higher resolution, more runs, etc.

Spherical geometry

- Uniform mapping by continuous functions for the whole computational domain
- Elastic equations solve directly in spherical coordinates
- Coordinate lines remain orthogonal with respect to each other
- Only few geometry parameters need to be pre-calculated

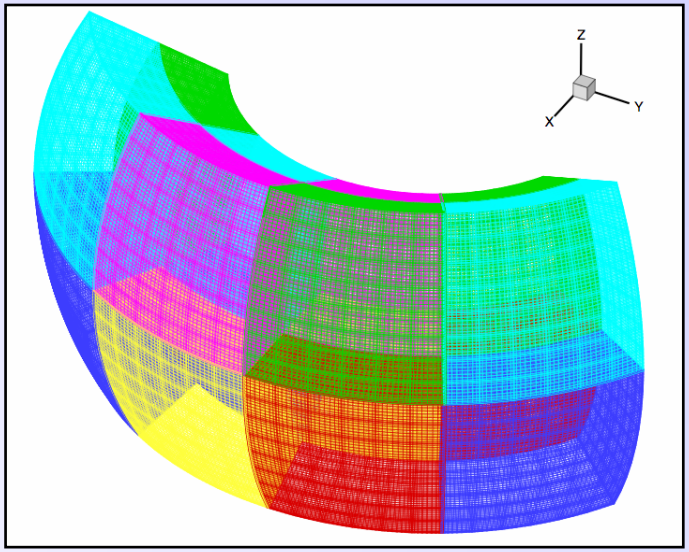

Spherical elastodynamic system

$$\partial_t \epsilon_{rr} = \partial_r v_r$$

$$\partial_t \epsilon_{\theta\theta} = \frac{1}{r}\partial_\theta v_\theta + \frac{1}{r} v_r$$

$$\partial_t \epsilon_{\phi\phi} = \frac{1}{r\sin\theta}\partial_\phi v_\phi + \frac{1}{r} v_r + \frac{\cot\theta}{r} v_\theta$$

$$\partial_t \epsilon_{r\theta} = \frac{1}{2}\left(\partial_r v_\theta - \frac{1}{r} v_\theta + \frac{1}{r}\partial_\theta v_r\right)$$

$$\partial_t \epsilon_{r\phi} = \frac{1}{2}\left(\partial_r v_\phi - \frac{1}{r} v_\phi + \frac{1}{r\sin\theta}\partial_\phi v_r\right)$$

$$\partial_t \epsilon_{\theta\phi} = \frac{1}{2}\left(\frac{1}{r}\partial_\theta v_\phi - \frac{cot\theta}{r} v_\phi + \frac{1}{r\sin\theta}\partial_\phi v_\theta\right)$$

$$\partial_t \sigma_{ij} = c_{ijkl}\partial_t \epsilon_{kl}$$

$$\rho\partial_t v_r = \partial_r \sigma_{rr} + \frac{1}{r}\partial_\theta \sigma_{r\theta} + \frac{1}{r\sin\theta}\partial_\phi \sigma_{r\phi} + \frac{1}{r}\left(2\sigma_{rr} - \sigma_{\theta\theta} - \sigma_{\phi\phi} + \cot\theta\sigma_{r\theta}\right) + f_r$$

$$\rho\partial_t v_\theta = \partial_r \sigma_{r\theta} + \frac{1}{r}\partial_\theta \sigma_{\theta\theta} + \frac{1}{r\sin\theta}\partial_\phi \sigma_{\theta\phi} + \frac{1}{r}\left[\cot\theta(\sigma_{\theta\theta} - \sigma_{\phi\phi}) + 3\sigma_{\theta\phi}\right] + f_\theta$$

$$\rho\partial_t v_\phi = \partial_r \sigma_{r\phi} + \frac{1}{r}\partial_\theta \sigma_{\theta\phi} + \frac{1}{r\sin\theta}\partial_\phi \sigma_{\phi\phi} + \frac{1}{r}\left(3\sigma_{r\phi} + 2\cot\theta\sigma_{\theta\phi}\right) + f_\phi$$

Free boundary condition: characteristics

- One-dimensilize problem
  (normal to boundary)

- Find eigenvectors and eigenvalues
  - Eigenvalues correspond to seismic velocities
  - Eigenvector elements are the characteristics (non-propagating, incoming. outgoing)

- Apply boundary condition and preserve outgoing characteristics

Free boundary condition: characteristics

$$\sigma_{11}^{\text{new}} = \sigma_{11}^{\text{old}} - \frac{\lambda}{\lambda + 2\mu}\sigma_{33}^{\text{old}}$$

$$\sigma_{22}^{\text{new}} = \sigma_{22}^{\text{old}} - \frac{\lambda}{\lambda + 2\mu}\sigma_{33}^{\text{old}}$$

$$\sigma_{33}^{\text{new}} = 0$$

$$\sigma_{12}^{\text{new}} = \sigma_{12}^{\text{old}} \qquad \text{[unchanged]}$$

$$\sigma_{13}^{\text{new}} = 0$$

$$\sigma_{23}^{\text{new}} = 0$$

$$v_1^{\text{new}} = v_1^{\text{old}} - \frac{1}{\rho V_s}\sigma_{13}^{\text{old}}$$

$$v_2^{\text{new}} = v_2^{\text{old}} - \frac{1}{\rho V_s}\sigma_{23}^{\text{old}}$$

$$v_3^{\text{new}} = v_3^{\text{old}} - \frac{1}{\rho V_p}\sigma_{33}^{\text{old}}$$

stress and velocities needed at same temporal level

Free surface

Order	N = 8
Elements	32 x 32 x 40
Points	226 x 226 x 282
Processors	64
Space	r = 0.8 ..1.0
	$\phi = \varphi = -5$ º.. +5º
Grid spacing	$0.17..1.08 * 10^{-3}$
Model	$V_S = 0.1$, $V_P = 0.2$
Courant	c < 0.2
	ca. 10 ppw
Scheme	Velocity-stress,
	Runge-Kutta 4th order
Source	Explosion at r = 0.96, off center
Boundaries	Free surface,
	Absorbing layer

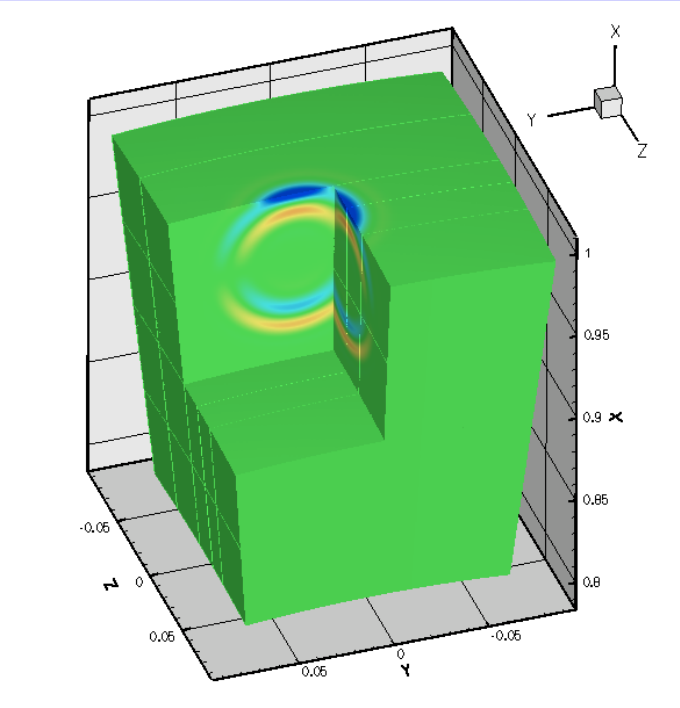

Free surface

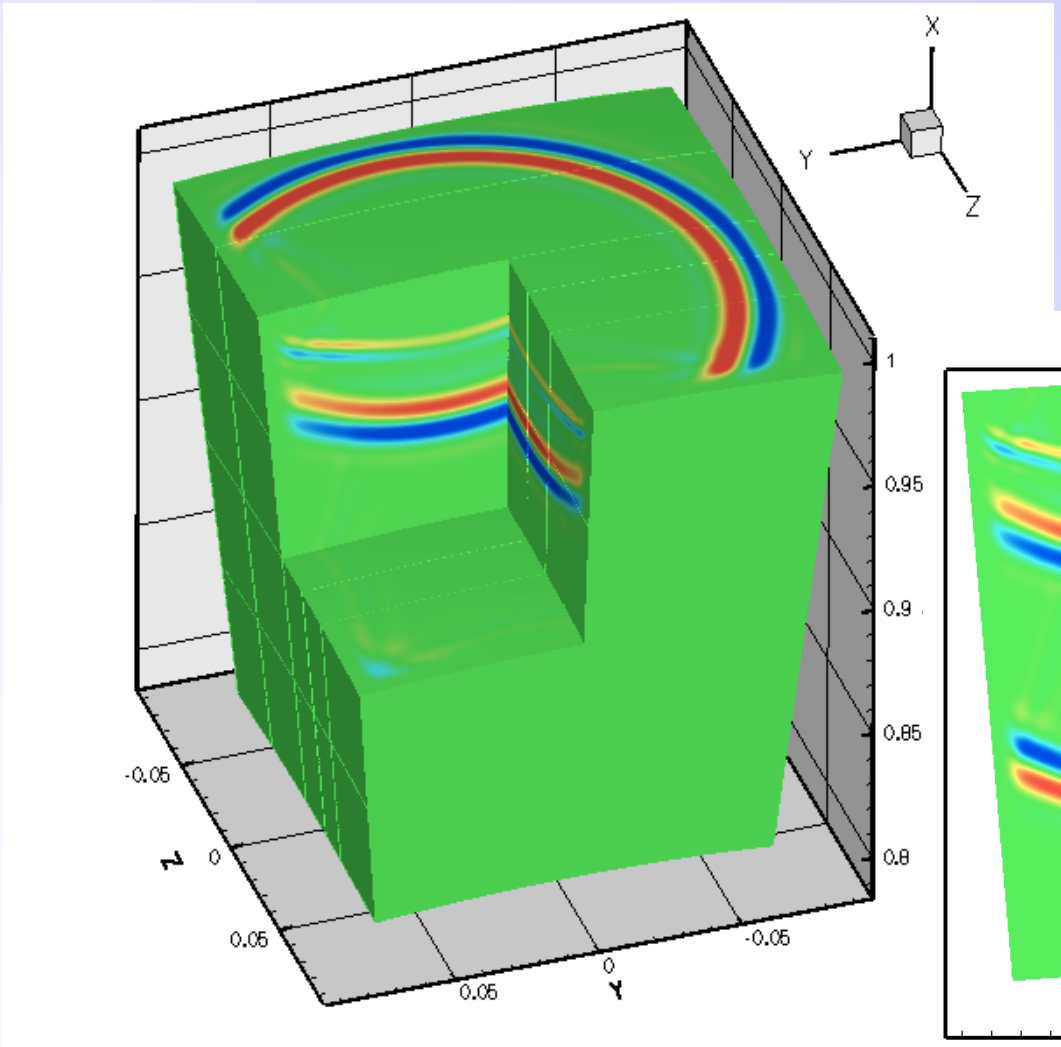

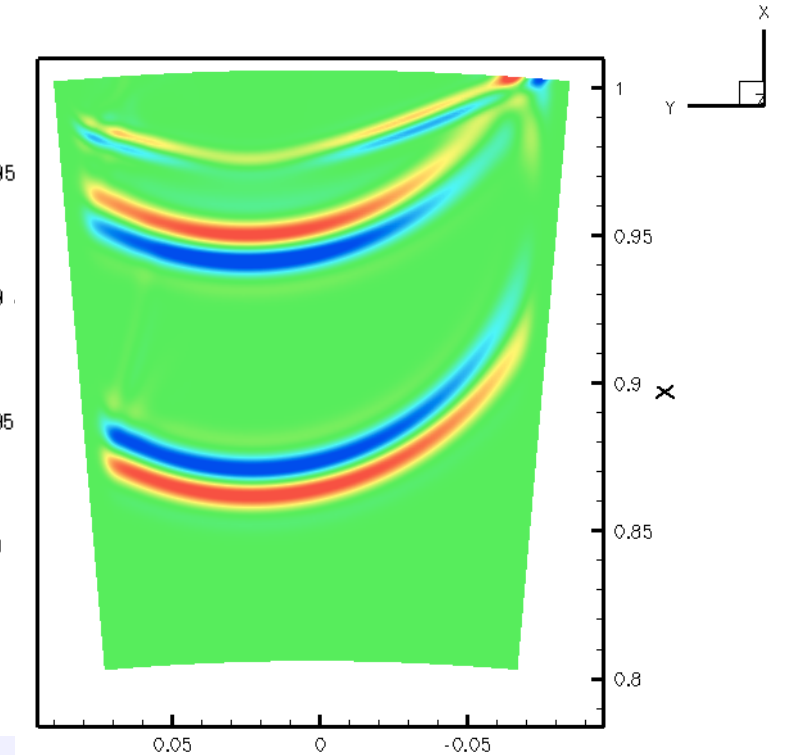

Application setup

- Processors 8 x 8 x 1
- Space depth = 0..400 km
  $\phi = \varphi = -8\,^{o}..\ +8^{o}$
- Vmax ca. 10 km/h
- Time scheme Runge-Kutta 4th order

Order	N = 6	N = 8	N = 10
Elements	120^2x28	88^2x24	68^2x16
Points	602^2x142	618^2x170	614^2x146
Min.spacing	1.0 km	0.75 km	0.58 km
Stability c_{CLF}	0.2		
Timestep [s]	0.02	0.015	0.0115
No. timestep for 300s simulation	15000	20000	26000

Application setup

- The stability constant c_{CLF}=0.2 may be too conservative
- The order (N=6,8,10 vs. 4) decrease minimum grid point distance
- The 4th order Runge-Kutta time integration scheme requires the equations to be evaluated 4 times
- Vertical stretching & multiple resolution would relax the stability condition
- Code optimization and memory access pattern should have major impact

Time-stepping schemes

symplectic scheme:

- energy conservation
- 3 substeps
- Propagation for 125 λ
- c = 1.65
  little dispersion

for comparison:

standard leap frog
c = 0.55
same computational costs

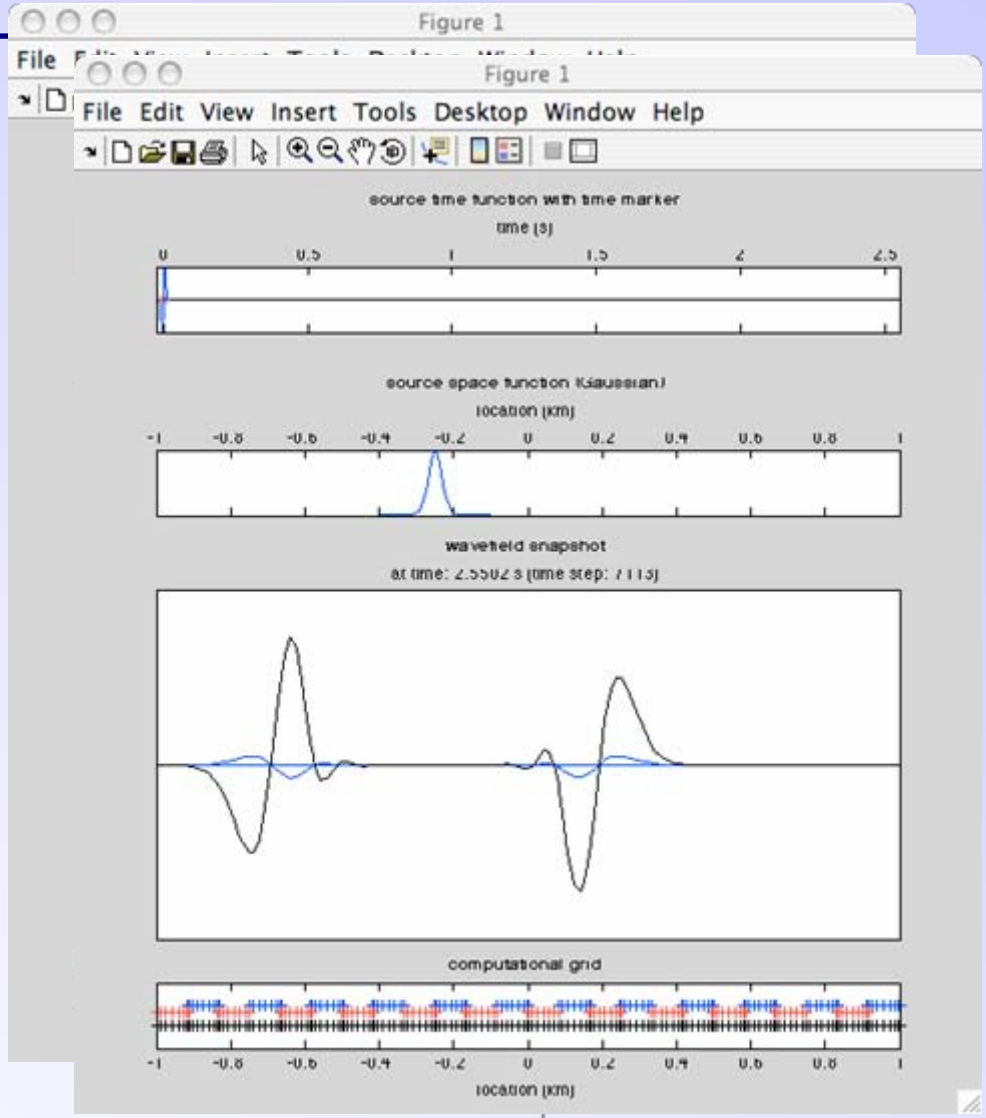

Free surface, 1D model

Order	N = 8
Elements	64 x 48 x 18
Points	450 x 338 x 128
Model size	φ = 20º, ϕ = 15º Depth = 600km
Grid spacing	1234..6907km
Vel. Model	sp6 [Morelli & Dziewonski 1993]
Courant	c < 0.1
Scheme	velocity-stress, leap-frog 2th order
Source	Explosion at 40km depth
Boundaries	Free surface Absorbing layer

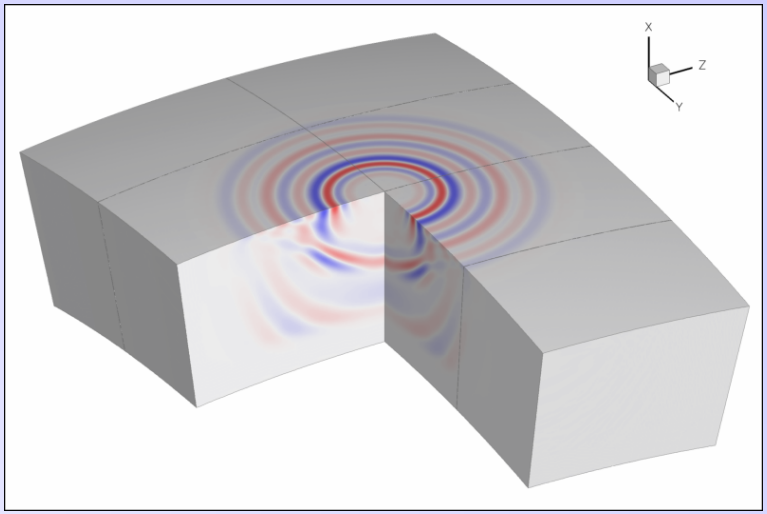

Free surface, 1D model

QuickTime™ and a
TIFF (PackBits) decompressor
are needed to see this picture.

Accuracy analysis

- Orients on SPICE code validation:
  - WP1_HSP1a
  - WP1_HHS1 (surface)
- Cartesian kernel
- Periodic boundaries
- Absorbing boundary only at the bottom of the WP1_HHS1 model

- Trade off between spectral order and computational costs
- Evaluate the boundary conditions

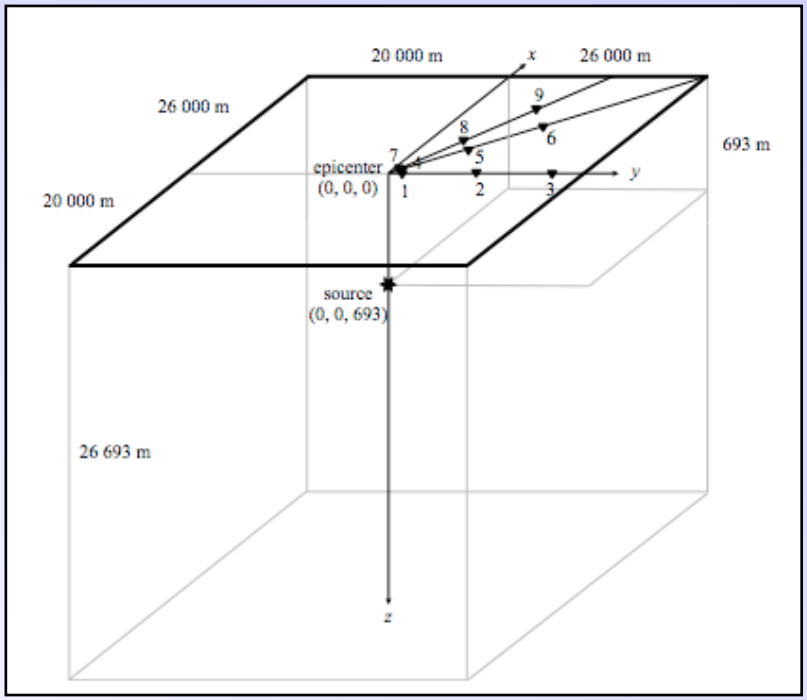

[Peter Moczo et al., 2006]

Conclusion: Further work

- Improve boundary conditions at the domain limits
- The accuracy analysis to choose appropriate time stepping and surface boundary conditions
- A multi-resolution setup would relax the time step condition
- Performance improvements
- Simulations with multiple wavefields and the *Cubed Sphere* geometry

Thank you for your attention!